THIS DOCUMENT CONTAINS INFORMATION PROPRIETARY TO DELTA MICROWAVE.ANY REPRODUCTION WITHOUT WRITTEN PERMISSION IS EXPRESSLY PROHIBITED.

ZONE	REV	DESCRIPTION	DATE	APPROVED
	A	FIRST RELEASE	03/04/03	

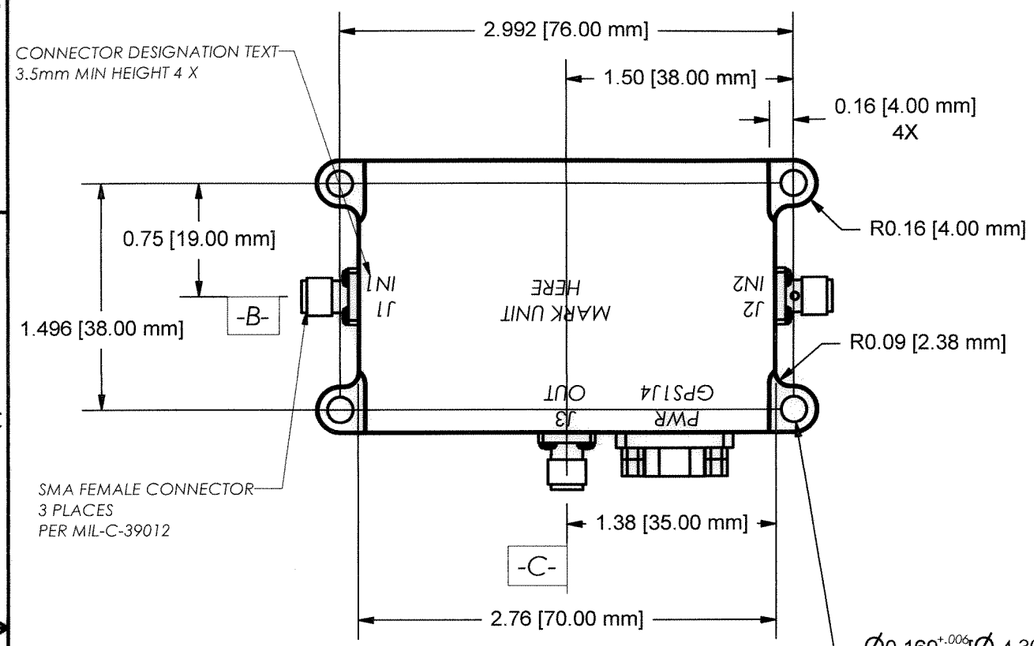

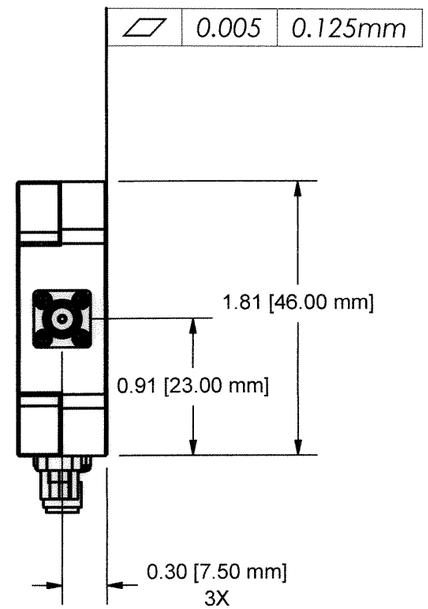

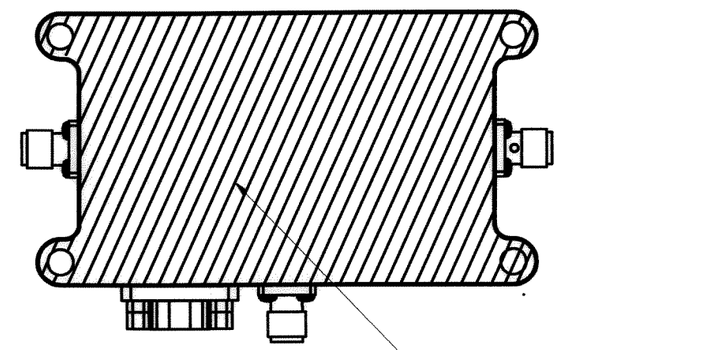

THIS SURFACE TO REMAIN FREE OF PAINT

$\varnothing 0.169^{+.006}_{-.002}$ [$\varnothing$ $4.300^{+.150}_{-.050}$ mm]

4X ⌖	$\varnothing$0.250mm Ⓜ	A	B	C
⌖	$\varnothing$.010 Ⓜ	A	B	C

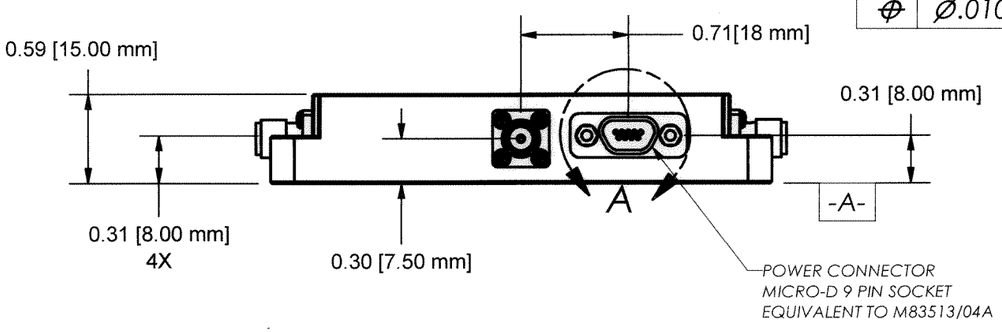

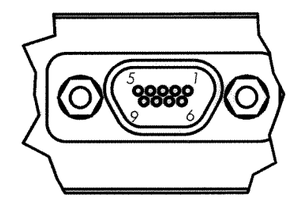

PIN CHART
1,2,6 PWR
4,5,9 RTN
3,7,8 N/C

DETAIL A
SCALE 2 : 1

2. MARKING: USING BLACK WARNOW INK TO INCLUDE DELTA MICROWAVE, MODEL NO., SERIAL NO. CODE IDENT. NO.51719 AND DATE CODE

1. FINISH: HAZE GRAY EPOXY POLYAMIDE TOPCOAT PER MIL-P-24441B TYP. 1 (AS) COLOR NO.26270, FORMULA 151 PER MIL-P-24441/1C, QPL 24441-103 USING EPOXY POLYAMID PRIMER PER MIL-P-2441B TYP.1 24272 GREEN FORMULA 150 PER MIL-P-24441/1C, QPL 24441-103

NOTES:

UNLESS OTHERWISE SPECIFIED DIMENSIONS ARE IN INCHES
TOLERANCES ARE:

FRACTIONS	DECIMALS	ANGLES
+	.xx ± .03	+
-	.xxx ± .010	-

MATERIAL

FINISH

USED ON MODEL#

DO NOT SCALE DRAWING

CONTRACT NO.	L5217	
APPROVALS		DATE
DRAWN	D.F.ESTABROOK	03/04/03
CHECKED		3/4/3
APPROVED		3/4/3

DELTA MICROWAVE

DELTA MICROWAVE
1301 VANGUARD DRIVE OXNARD, CA 93033

TITLE

L5217 OUTLINE

SIZE	CODE IDENT NO.	DWG NO
B	51719	L5217

SCALE FULL SHEET 1 OF 1